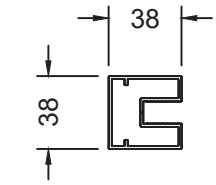

DETAIL PEC-910
VIEW 1:4

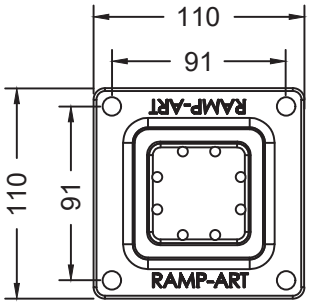

DETAIL SA-230
VIEW 1:4

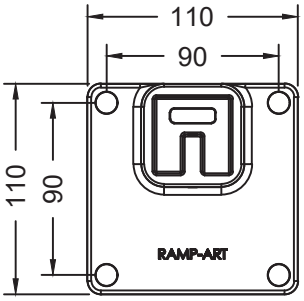

DETAIL SA-910
VIEW 1:4

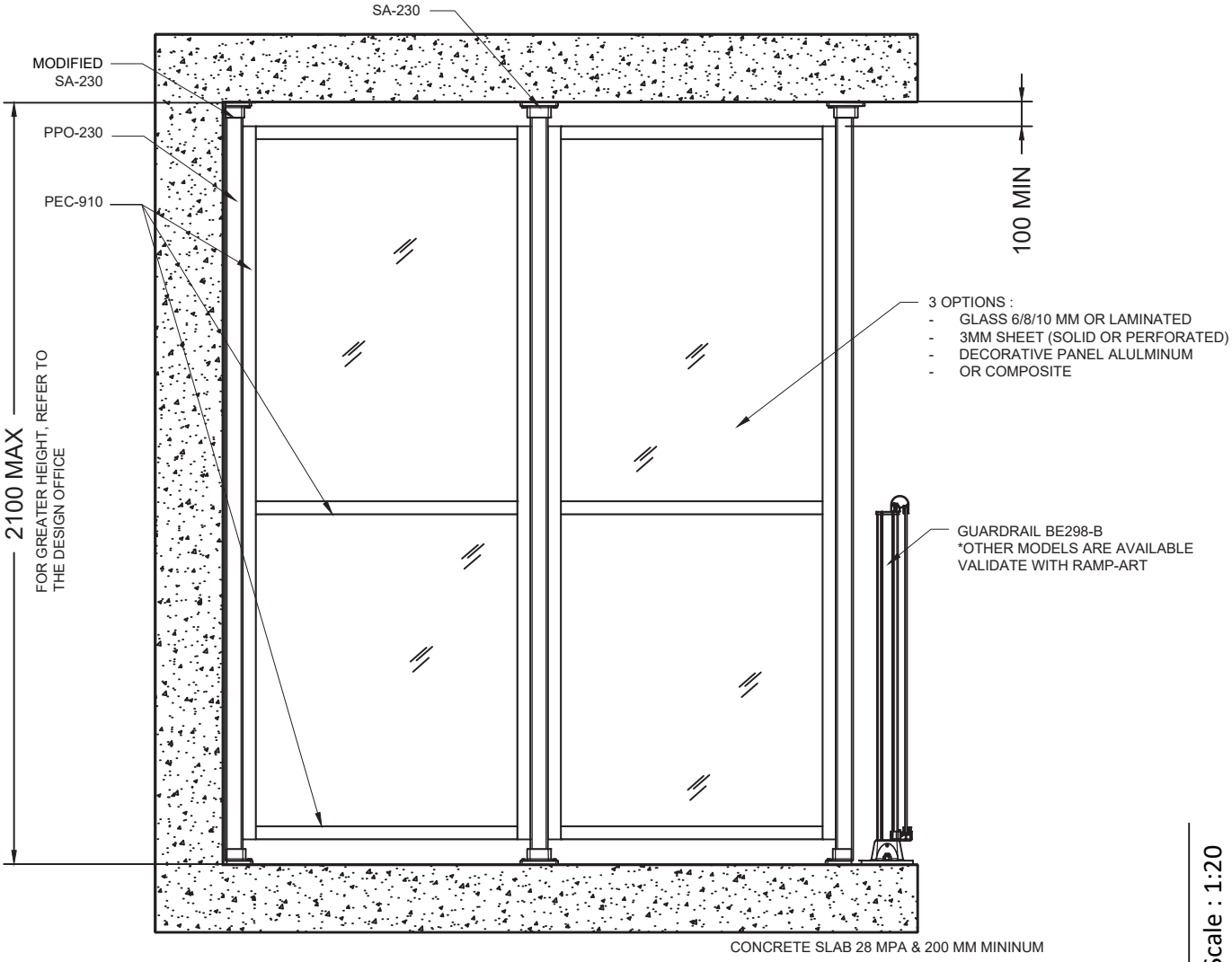

Scale : 1:20

SEPARATOR SCREEN - HIGH CAPACITY MODEL - SLAB TO SLAB